STOCKHOLM 1265

220-240V 50-60Hz | IP 65 | LED | DIM

Stockholm 1265XX0011
27.10.2020 v.11.2
www.norlys.com

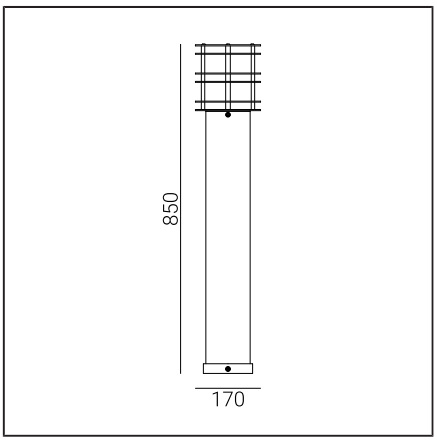

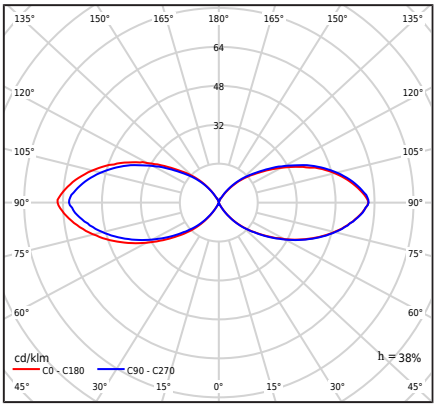

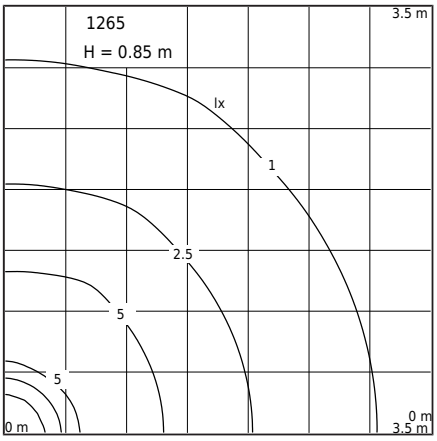

Type of luminaire

Photometric body	Uncovered, diffused light with rotationally symmetrical light distribution.
Characteristics of the luminaire	Bollard luminaire of stable and durable construction. For lighting private areas and public spaces.

General information

Materials	Hot-dip galvanized steel. Lens - plastic PMMA in milky color. Silicone gasket.
Mounting method	Fixing of the luminaire: 3 holes ø9mm with a diameter of ø65mm every 120 °.
Terminal	Connection terminals: max 3x4mm², possibility to connect luminaire in loop max 3x2,5mm². A round wire in the isolation with a diameter of max ø12,5mm.
Type of light source	LED module AC integrated
Light control	Phase-dimming (TRIAC).
Net / gross weight of luminaire	9,23kg / 11,02kg
Box dimensions [cm]	20,5x20,5x91

Technical data

LED module	Lumens EDC/47C/10W/830/230V/A001
Light source wattage	10W
Luminaire wattage	10W
Lamp luminous flux	900lm
Luminaire luminous flux	294lm
Light source efficiency	90lm/W
Efficiency of the luminaire	29,4lm/W
ULOR	50%
Color temperature	3000K
Colour consistency (McAdam ellipse)	SDCM3
Colour rendering index CRI	80
Rated life time L70/B50 at 25°C	50 000h
Energy Efficiency Index	A+
Power Factor luminaire	PF > 0,99
Ta Rated temperature	+25°C
Inrush current	46,1mA / 500µs

Maximum number of luminaires of this type per MCB:

B 10A: 42, B 16A: 68, C 10A: 70, C 16A: 115

Accessories sold separately

205ZX0010	Concreting anchor.
206GA0010	Ground anchor.
206GA0S10	Anchoring support.

Spare parts

06295000	Lens.
08295000	Gasket.
46999366	LED module.

Files to download

Photometric LDT files	Photometric IES files
Manual	

Indexes

Index	Color	RAL
1265B	BLACK	9005
1265GA	GALVANIZED	-

Norlys AS
P.B 1014 Hoff, 0218 Oslo
Hovfaret 4B, 0275 Oslo
Norway
+47 24 12 40 11
firmapost@norlys.no

TÜVRheinland CERTIFIED
Management System ISO 9001:2015 IATF 16949:2016
www.tuv.com ID 9108651873
PCC Cert CERTIFICATE ISO 14001
RoHS 2011/65/UE

Please read the manual before installing. Due to the dynamic development of lighting technology, additional information is available upon request. LED module must be replaced by a qualified person in accordance with applicable regulations. Condensation, which can occur in luminaires, is a natural phenomenon and does not impair the quality of the luminaire.